INOSENT
GAS DETECTION

CARBON DIOXIDE-SIL2-DETECTOR S4015CO2

Designed to meet with tough industrial requirements, the Smart-Detector allow monitoring toxic and flammable contents in harsh environments and classified areas. They offer a 8-digit back-light display and 5 mode status LED for the gas concentration reading.
Ideal in harsh environments, the Smart-Detector feature non intrusive calibration for an accurate and easy adjustment via Hall-effect switches, without opening the instrument and declassifying the area.
The detectors are IP 65 protected (optional IP67) and complying with SIL3 SW and SIL2 HW.
As an option, the sensor is available with dual-head concept and in stainless steel construction.

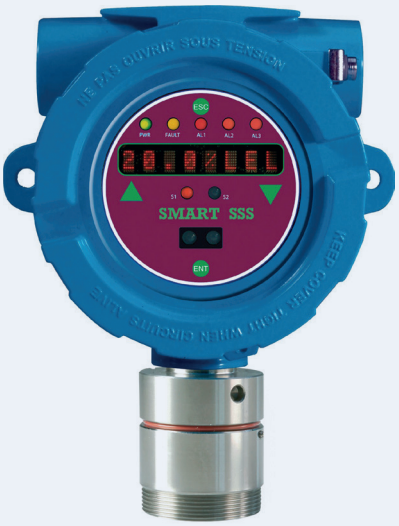

SPECIFCATIONS ELECTRONICS

SUPPLY: 24 VDC | **POWER CONSUMPTION:** max. 130 mA | **WIRING ANALOGUE/DIGITAL:** 3×0,75 mm2 up to 100 m, shielded, 2×2×0.8 mm2, shielded | **SIGNAL-OUTPUT ANALOGUE/DIGITAL:** 4...20 mA, Modbus RTU | **OPTIONAL RELAY OUTPUTS:** 1 or 3 | **WEIGHT:** 950...1700 gr | **CERTIFIED FOR:** SIL 2 (3) after EN50402, ATEX Group II 2G, 2GD, 3G & GD, HART-Protocol (optional)

SPECIFCATIONS SENSOR

MEASURING PRINCIPLE: Infrared | **MEASURING RANGE:** 0...2 Vol. % (Type S4016CO2 0...5 Vol. %/ Type S4017 0...30 Vol. %) | **ACCURACY:** +/- 2 % of measuring range | **RESPONSE TIME:** t 90: < 30 sec | **OPERATION TEMPERATURE:** -40 °C ...+60 °C | **HUMIDITY:** 20...90 % (non condensing) **APPROX. LIFETIME AT 20°C:** > 8 years, depending on applicaton | **CALIBRATION:** It is necessary to inspect the gas detector every 6 month and to recalibrate it only if needed.

DIMENSIONS AND CONNECTIONS

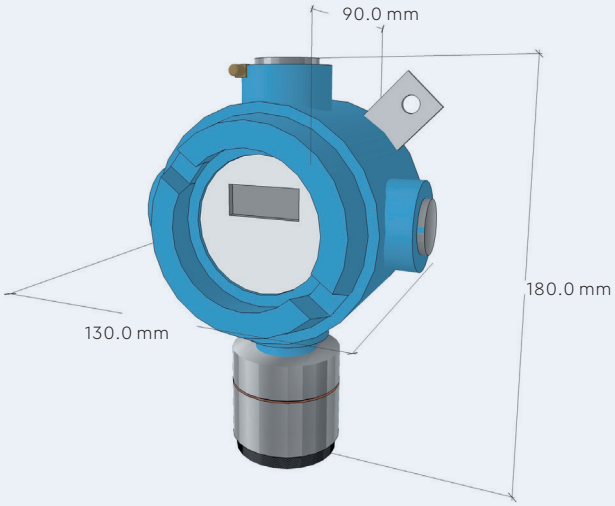

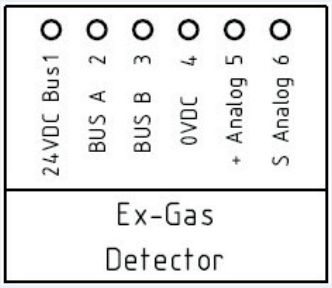

INOSENT GASWARNTECHNIK AG | In der Hohfurri 19 | CH-8172 Niederglatt/ Switzerland
T. +41 (0)43 558 74 00 | F. +41 (0)43 558 74 05 | CHE-410.842.770 MWST | info@inosent.ch | www.inosent.ch