INOSENT
GAS DETECTION

CHLORINE-SMART-DETECTOR S3013CL FOR EX-ZONE 1

Designed to meet with tough industrial requirements, the Smart-Detector allow monitoring toxic and flammable contents in harsh environments and classified areas.
They offer a 4-digit back-light display and 5 mode status LED for the gas concentration reading.
Ideal in harsh environments, the Smart-Detector feature non intrusive calibration for an accurate and easy adjustment via Hall-effect switches, without opening the instrument and declassifying the area.
The detectors is IP65 protected and SIL2 Hardware tested (not certified) and provides a simple concept to replace sensors. As an option the gas detectors is also available without a display.

SPECIFCATIONS ELECTRONICS

SUPPLY: 24 VDC | **POWER CONSUMPTION:** max. 70 mA | **WIRING ANALOGUE/DIGITAL:** 3×0,75 mm2 up to 100 m, shielded, 2×2×0,75 mm2, shielded | **SIGNAL-OUTPUT ANALOGUE/DIGITAL:** 4...20 mA, Modbus RTU | **OPTIONAL RELAY OUTPUTS:** 1 or 3 | **WEIGHT:** 950...1700 gr | **ATEX CERTIFIED FOR:** Group II 2G (ATEX II2G Ex d IIC T6), 2GD, 3G & GD and for Group I M2 (with larger enclosure)

SPECIFCATIONS SENSOR

MEASURING PRINCIPLE: Electrochemical | **MEASURING RANGE:** 0...5 ppm (Type S3015CL 0...20 ppm) **ACCURACY:** +/- 2 % of measuring range | **RESPONSE TIME:** t 90: < 30 sec | **OPERATION TEMPERATURE:** -20 °C ...+50 °C | **HUMIDITY:** 20...90 % (non condensing) | **APPROX. LIFETIME:** > 2 years depending on applicaton | **CALIBRATION:** It is necessary to inspect the gas detector every 3 month and to recalibrate it only if needed.

DIMENSIONS AND CONNECTIONS

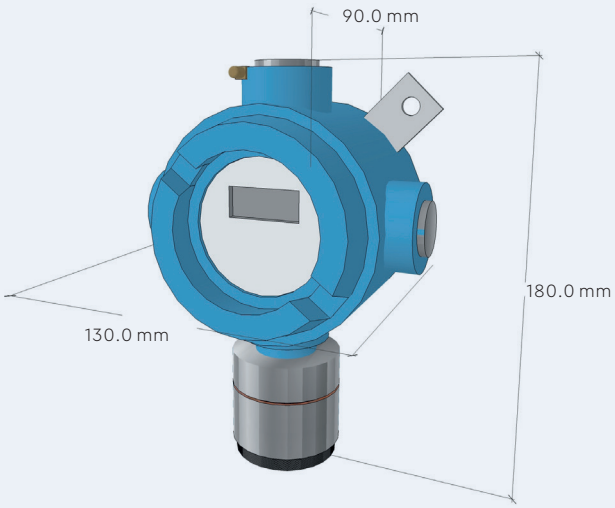

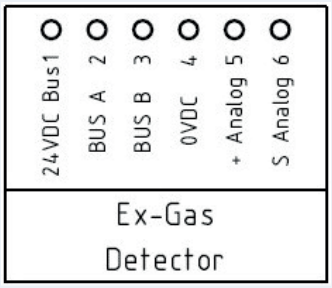

INOSENT GASWARNTECHNIK AG | In der Hohfurri 19 | CH-8172 Niederglatt / Switzerland
T. +41 (0)43 558 74 00 | F. +41 (0)43 558 74 05 | CHE-410.842.770 MWST | info@inosent.ch | www.inosent.ch